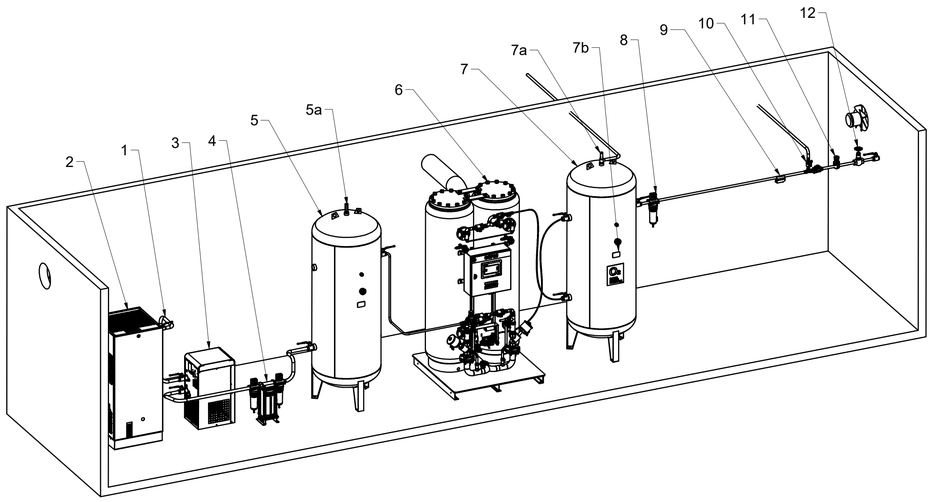

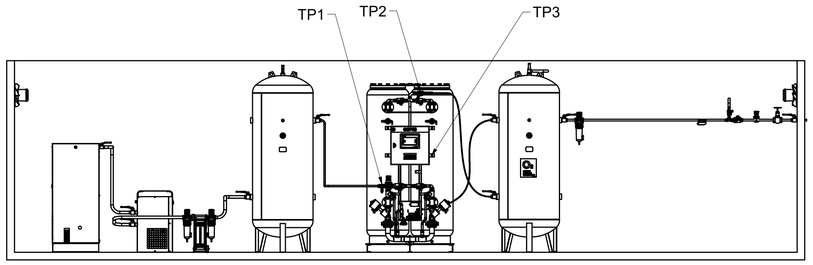

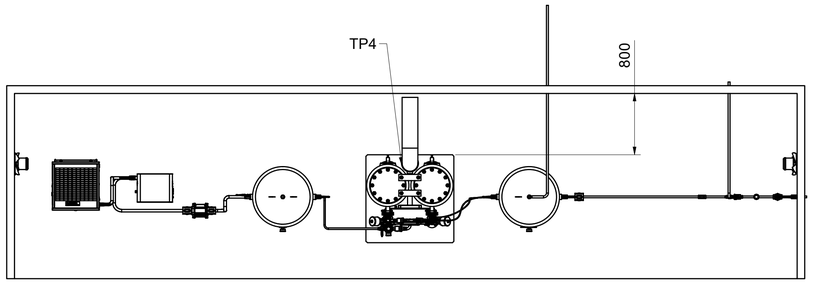

⚠ Oxygen net according to specification 9828 0757 00 ⚠

Legend :
(1) Piping
(2) Compressor
(3) Dryer (Can also be integrated, see addendum)
(4) Filtration
(5) Air tank
(5a) Safety Valve
(6) Oxygen Generator
(7) Product tank
(7a) Oxygen safety Valve
(7b) Oxygen Tank Label
(8) Oxygen Filter
(9) Flow Sensor
(10) Oultlet Flushing
(11) Pressure Regulator
(12) Flow Regulator

The oxygen generator must be installed on a level floor suitable for taking the weight of the generator. There must be a free space of 800mm around the generator.

Tank sizes and pipe connections

-																		
Model		OGP2	OGP3	OGP4	OGP5	OGP6	OGP12	OGP20	OGP25	OGP35	OGP45	OGP65	OGP75	OGP95	OGP130	OGP150	OGP195	OGP225
Air tank	[L]	60	90	150	270	500	750	1000	1000	1500	2000	2000	3000	1500	1500	1500	1500	1500
	[Gal]	20	30	60	80	120	200	240	240	400	500	500	1060	400	400	400	400	400
Product tank	[L]	60	90	150	150	270	500	500	1000	1000	1500	2000	3000	1500	1500	1500	1500	1500
	[Gal]	20	30	60	60	80	120	120	240	240	400	500	1060	400	400	400	400	400
TP1	Air inlet (PED)	R3/4" M	R3/4" M	R3/4" M	R3/4" M	R3/4" M	R 1" M	R 1" M	R 1 1/2" M	R 1 1/2" M	R 2" M	R 2" M	R 2" M	DIN DN50	DIN DN50	DIN DN50	DIN DN80	DIN DN80
TP1	Air inlet (ASME)	3/4" NPT	3/4" NPT	3/4" NPT	3/4" NPT	3/4" NPT	1" NPT	1" NPT	1 1/2" NPT	1 1/2" NPT	2" NPT	2" NPT	2" NPT	ANSI 2"	ANSI 2"	ANSI 2"	ANSI 3"	ANSI 3"
TP2	Gas outlet (PED)	pneumatic fitting for 12mm hose	pneumatic fitting for 12mm hose	pneumatic fitting for 12mm hose	pneumatic fitting for 12mm hose	pneumatic fitting for 12mm hose	pneumatic fitting for 15mm hose	pneumatic fitting for 15mm hose	R3/4" M	R3/4" M	R 1" M	R 1" M	R 1" M	1 1/2" M	1 1/2" M	1 1/2" M	DIN DN65	DIN DN65
TP2	Gas outlet (ASME)	pneumatic fitting for 12mm hose	pneumatic fitting for 12mm hose	pneumatic fitting for 12mm hose	pneumatic fitting for 12mm hose	pneumatic fitting for 12mm hose	pneumatic fitting for 15mm hose	pneumatic fitting for 15mm hose	3/4" NPT	3/4" NPT	1" NPT	1" NPT	1" NPT	1 1/2" NPT	1 1/2" NPT	1 1/2" NPT	ANSI 2,5"	ANSI 2,5"
TP3	Gas sample inlet	6mm push-in	6mm push-in	6mm push-in	6mm push-in	6mm push-in	6mm push-in	6mm push-in	6mm push-in	6mm push-in	6mm push-in	6mm push-in	6mm push-in	6mm push-in	6mm push-in	6mm push-in	6mm push-in	6mm push-in
TP4	Waste exhaust	150mm duct	150mm duct	150mm duct	150mm duct	150mm duct	150mm duct	200mm duct	200mm duct	200mm duct	250mm duct	250mm duct	250mm duct	2x 250mm duct	2x 250mm duct	2x 250mm duct	2x 315mm duct	2x 315mm duct
FT01	Flow sensor (optional)	R 1/4" F	R 1/4" F	R 1/4" F	R 1/4" F	R 1/4" F	R 1/2" F	R 1/2" F	R 1/2" F	R 1/2" F	R 1/2" F	R 1/2" F	R 1" F	R 1" F	R 1 1/4" F	R 1 1/4" F	R 1 1/4" F	R 1 1/2" F
FR1	Flow regulator	G1/4" F	G1/4" F	G1/4" F	G1/4" F	G1/4" F	G 1/2" F	G 1/2" F	G 1/2" F	G 3/4" F	G 3/4" F	G 3/4" F	G 3/4" F	G 1" F	G 1" F	G 1" F	G 1 1/4" F	G 1 1/4" F
PR2	Pressure regulator	G1/4" F	G1/4" F	G1/4" F	G1/4" F	G1/4" F	G1/2" F	G1/2" F	G3/4" F	G3/4" F	G 1" F	G 1" F	G 1" F	G 1" F	G 1" F	G 1" F	G 1" F	G 1" F
V9	Outlet flushing (optional)	G3/8" F	G3/8" F	G3/8" F	G3/8" F	G3/8" F	G1/2" F	G1/2" F	G3/4" F	G3/4" F	G 1" F	G 1" F	G 1" F	G 1" F	G 1" F	G 1" F	G 1" F	G 1" F

All materials supplied are in compliance with the requirements of the List of Prohibited Substances

Ed	Position	Gewijzigd van / Modified from	Datum / Date	Ingev./Goedg. / Intr./Appd.
00			2013-04-04	

CONFIDENTIAL:
This document is our property and shall not without our par permission be altered, copied, used or made available by or communicated to any other person or company

9828075100	00.03	
Parent 3D model	Ed . Version 3D	Approved

Tolerances, if not indicated, according to:
ATLAS COPCO STANDARD CLASS

Name: Installation proposal OGP 2-225
Material: NOT APPLICABLE
Treatment: Not Applicable
Secrecy Class: 1102 K / 2
INV

Atlas Copco

Scale | Family | A1 | Compare | Drawing owner: All
Drawn by: AIR15083 | Blank nr. | Replaces
STATUS | Version Drwg: 00.10 | Kg | Kg | Designation | Sheet 1 / 2
Des checked. | Prod checked. | Approved. | Date: 2013-01-16

9828075100-01

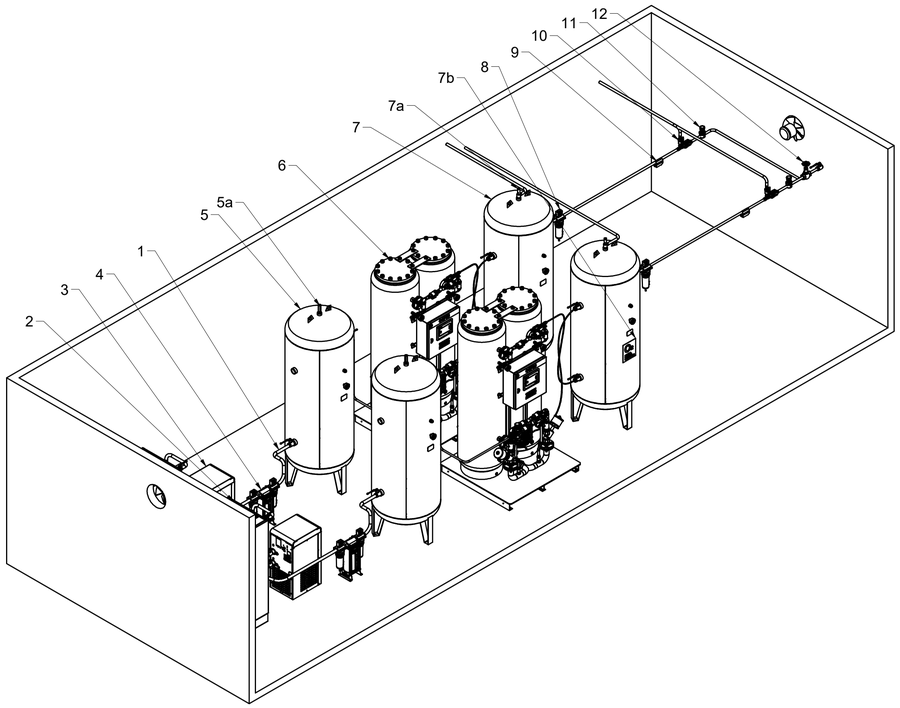

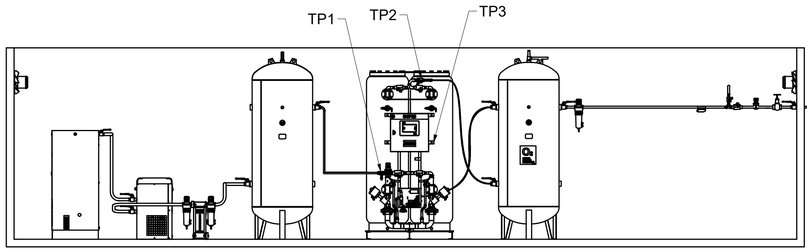

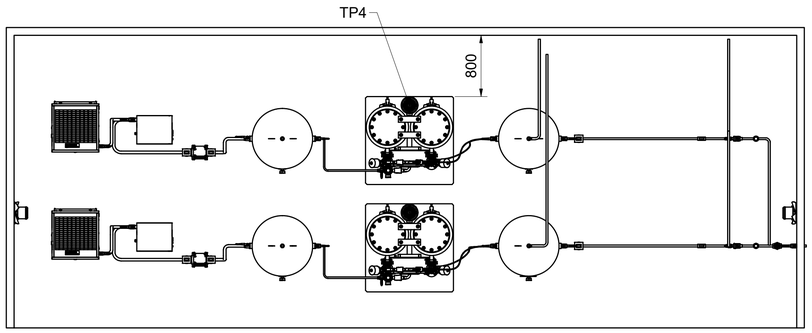

⚠ Oxygen net according to specification 9828 0757 00 ⚠

Legend :
(1) Piping
(2) Compressor
(3) Dryer (Can also be integrated, see addendum)
(4) Filtration
(5) Air tank
(5a) Safety Valve
(6) Oxygen Generator
(7) Product tank
(7a) Oxygen safety Valve
(7b) Oxygen Tank Label
(8) Oxygen Filter
(9) Flow Sensor
(10) Oultlet Flushing
(11) Pressure Regulator
(12) Flow Regulator

The oxygen generator must be installed on a level floor suitable for taking the weight of the generator.
There must be a free space of 800mm around the generator.

All materials supplied are in compliance with the requirements of the List of Prohibited Substances

Tank sizes and pipe connections

-																		
Model		OGP2	OGP3	OGP4	OGP5	OGP6	OGP12	OGP20	OGP25	OGP35	OGP45	OGP65	OGP75	OGP95	OGP130	OGP150	OGP195	OGP225
Air tank	[L]	60	90	150	270	500	750	1000	1000	1500	2000	2000	3000	1500	1500	1500	1500	1500
	[Gal]	20	30	60	80	120	200	240	240	400	500	500	1060	400	400	400	400	400
Product tank	[L]	60	90	150	150	270	500	500	1000	1000	1500	2000	3000	1500	1500	1500	1500	1500
	[Gal]	20	30	60	60	80	120	120	240	240	400	500	1060	400	400	400	400	400
TP1	Air inlet (PED)	R3/4" M	R3/4" M	R3/4" M	R3/4" M	R3/4" M	R 1" M	R 1" M	R 1 1/2" M	R 1 1/2" M	R 2" M	R 2" M	R 2" M	DIN DN50	DIN DN50	DIN DN50	DIN DN80	DIN DN80
TP1	Air inlet (ASME)	3/4" NPT	3/4" NPT	3/4" NPT	3/4" NPT	3/4" NPT	1" NPT	1" NPT	1 1/2" NPT	1 1/2" NPT	2" NPT	2" NPT	2" NPT	ANSI 2"	ANSI 2"	ANSI 2"	ANSI 3"	ANSI 3"
TP2	Gas outlet (PED)	pneumatic fitting for 12mm hose	pneumatic fitting for 12mm hose	pneumatic fitting for 12mm hose	pneumatic fitting for 12mm hose	pneumatic fitting for 12mm hose	pneumatic fitting for 15mm hose	pneumatic fitting for 15mm hose	R3/4" M	R3/4" M	R 1" M	R 1" M	R 1" M	1 1/2" M	1 1/2" M	1 1/2" M	DIN DN65	DIN DN65
TP2	Gas outlet (ASME)	pneumatic fitting for 12mm hose	pneumatic fitting for 12mm hose	pneumatic fitting for 12mm hose	pneumatic fitting for 12mm hose	pneumatic fitting for 12mm hose	pneumatic fitting for 15mm hose	pneumatic fitting for 15mm hose	3/4" NPT	3/4" NPT	1" NPT	1" NPT	1" NPT	1 1/2" NPT	1 1/2" NPT	1 1/2" NPT	ANSI 2,5"	ANSI 2,5"
TP3	Gas sample inlet	6mm push-in	6mm push-in	6mm push-in	6mm push-in	6mm push-in	6mm push-in	6mm push-in	6mm push-in	6mm push-in	6mm push-in	6mm push-in	6mm push-in	6mm push-in	6mm push-in	6mm push-in	6mm push-in	6mm push-in
TP4	Waste exhaust	150mm duct	150mm duct	150mm duct	150mm duct	150mm duct	150mm duct	200mm duct	200mm duct	200mm duct	250mm duct	250mm duct	250mm duct	2x 250mm duct	2x 250mm duct	2x 250mm duct	2x 315mm duct	2x 315mm duct
FT01	Flow sensor (optional)	R 1/4" F	R 1/4" F	R 1/4" F	R 1/4" F	R 1/4" F	R 1/2" F	R 1/2" F	R 1/2" F	R 1/2" F	R 1/2" F	R 1/2" F	R 1" F	R 1" F	R 1 1/4" F	R 1 1/4" F	R 1 1/4" F	R 1 1/2" F
FR1	Flow regulator	G1/4" F	G1/4" F	G1/4" F	G1/4" F	G1/4" F	G 1/2" F	G 1/2" F	G 1/2" F	G 3/4" F	G 3/4" F	G 3/4" F	G 3/4" F	G 1" F	G 1" F	G 1" F	G 1 1/4" F	G 1 1/4" F
PR2	Pressure regulator	G1/4" F	G1/4" F	G1/4" F	G1/4" F	G1/4" F	G1/2" F	G1/2" F	G3/4" F	G3/4" F	G 1" F	G 1" F	G 1" F	G 1" F	G 1" F	G 1" F	G 1" F	G 1" F
V9	Outlet flushing (optional)	G3/8" F	G3/8" F	G3/8" F	G3/8" F	G3/8" F	G1/2" F	G1/2" F	G3/4" F	G3/4" F	G 1" F	G 1" F	G 1" F	G 1" F	G 1" F	G 1" F	G 1" F	G 1" F

Tolerances, if not indicated, according to:
ATLAS COPCO STANDARD CLASS

Name: Installation proposal OGP 2-225
Material: NOT APPLICABLE
Treatment: Not Applicable
Secrecy Class: 1102 K / 2
INV

Atlas Copco
STATUS: Approved
Scale
Drawn by: AIR15083
Version Drwg: 00.10
Des checked.
Family
Blank nr.
Kg
Prod checked.
Approved.
Date: 2013-01-16
A1
Compare
Replaces
Drawing owner: All
Designation: 9828075100-02
Sheet 2 / 2

9828075100 | 00.03
Parent 3D model | Ed . Version 3D

Ed	Position	Gewijzigd van / Modified from	Datum / Date	Ingev./Goedg. / Intr./Appd.
00			2013-04-04	

CONFIDENTIAL:
This document is our property and shall not without our par permission be altered, copied, used or made available to any other person or company.

All

Document title:

Installation proposal OGP2-225: addendum

Revision:	Reason for Revision:		Product Company:
2	Ready for initial release		API
Created by: AIR15356	Approved By:	Issue date: 2023/06/07	Page: 1 of 14
Document No. 9828075100-03			Secrecy (acc.1102 K): Internal
			State: RELEASED

REVISION RECORD

CONFIDENTIAL: This document is property of Atlas Copco and shall not without our permission be altered, copied, used for manufacturing or communicated to any other person or company.

Rev No.	Reason for Revision	Date

INDEX

General 3

..... 3

1 Piping 4

2 Compressor 5

2.1 Parallel installation 5

2.2 Connection to an existing air net 7

3 Dryer 8

4 Inlet filtration 9

5 Compressed air tank 9

5.1 Air tank safety valve 9

6 Oxygen generator 10

7 Product & storage tank 10

7.1 Product tank label 10

7.2 Product tank safety valve 10

7.3 Storage tank 10

8 Oxygen filtration 11

9 Outlet regulation and gas sample inlet 11

9.1 Sample gas connection 13

9.2 Flow sensor (optional) 13

9.3 Outlet flushing (optional) 13

10 Waste gas connection 13

11 Ventilation 14

11.1 Waste gas is not routed outdoors 14

11.2 Waste gas is routed outdoors 14

CONFIDENTIAL: This document is property of Atlas Copco Oil Free Air and shall not without our permission be altered, copied, used for manufacturing or communicated to any other person or company.

General

This instruction, along with the installation proposal drawings (-01 and -02), will guide you to select and install the correct components to complete the installation of an oxygen generator plant. The sizing of all components is initially done by using the OGP selection tool, from which a report can be drafted.

WARNING: the following instructions need to be followed carefully in order for the oxygen generator plant to function properly and safely. Refer to the installation instructions for further details on safety precautions during installation.

Installation proposal referring to each chapter in this instruction:

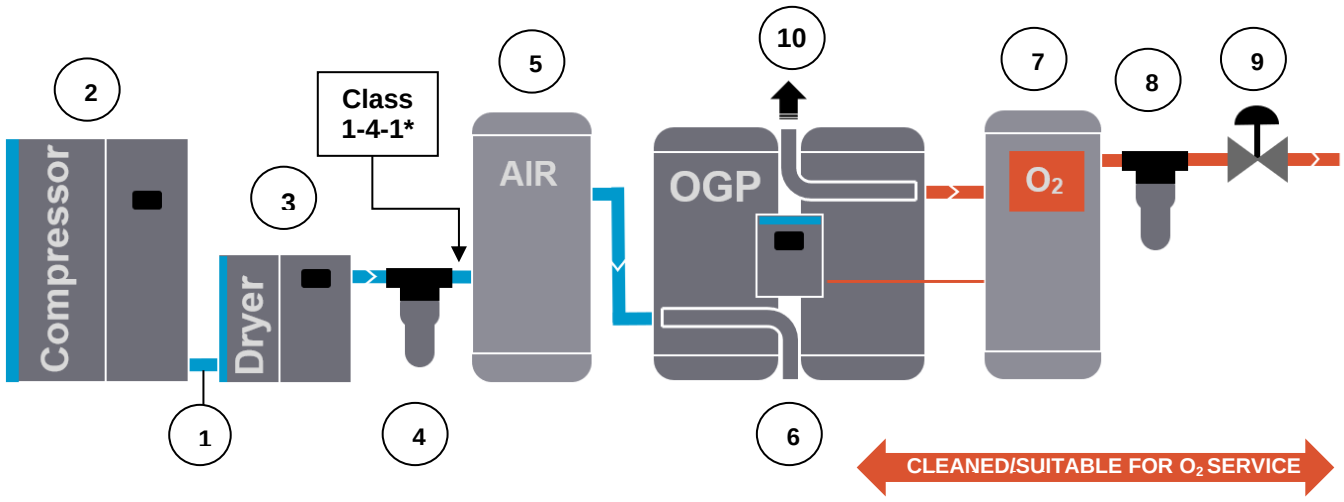

*according to ISO8573-1:2010

The equipment proposed in this document leads to an inlet air quality of 1-4-1 according to ISO8573-1:2010. Note that this quality can also be obtained by using other equipment.

Tapping points:

TP1	Air inlet
TP2	Gas outlet
TP3	Gas sample inlet (from product tank)
TP4	Waste exhaust

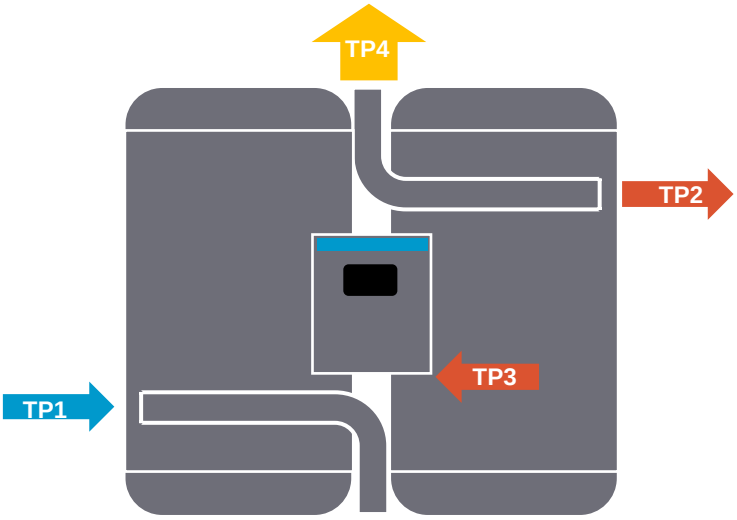

CONFIDENTIAL: This document is property of Atlas Copco Oil Free Air and shall not without our permission be altered, copied, used for manufacturing or communicated to any other person or company.

1 *Piping*

WARNING: The piping of an oxygen net poses specific risks:

- Any debris in the oxygen net can cause frictional heat and sparks under certain conditions
- Loose metal particles can cause impingement and create heat and sparks
- Any volatile organic compound (or hydrocarbon) with a concentration higher than 500mg/m² can potentially ignite.

Consult the dimensioning table on the installation proposal to select the correct piping diameters. Keep oxygen flow velocities as low as possible. If the oxygen flow doubles, then particle energy increases by a factor of four.

- No sudden changes in direction (no short bends, tee's,..)
- Never reduce the diameter of a pipe

Install the tanks in the close vicinity of the generator, in order to keep the piping lengths between the tanks and the generator as short as possible. The maximum pipe length between tanks and the generator is 5 meters. In case this length is exceeded, the diameter of the piping needs to be oversized.
In the latter case, the maximum pipe length is limited to 10m / 33ft.

All pipes should be installed stress-free and should be adequately supported.

The installation must be entirely leak-free in order to produce oxygen at the requested level and avoid uncontrolled oxygen leaks.

Piping material for compressed air:

- Use AIRnet aluminium piping.
- Select the diameter according to the diameters shown on page 1 and 2 of the installation proposal.

Piping material for oxygen:

- Use only rigid stainless steel or copper piping such as AIRnet or oxygen approved press fittings.
- All pipes and couplings shall be cleaned and degreased using a suitable solvent and procedure. All traces of the solvent shall be removed before oxygen is admitted.
- Use of grease or oil in oxygen nets are prohibited.
- Only install gaskets, o-rings and seals suited for oxygen such as Viton or Teflon.
- Select the diameter according to the diameters shown on page 1 and 2 of the installation proposal.

CONFIDENTIAL: This document is property of Atlas Copco Oil Free Air and shall not without our permission be altered, copied, used for manufacturing or communicated to any other person or company.

When an oxygen pipe enters a room, install an isolation valve outside the room in an accessible location. This to be able to shut-off the oxygen supply to a room in case of leaks, without causing a hazardous situation (i.e. by entering an oxygen enriched room).

Notes on specific components:

- Do not use pressure gauges filled with glycerin due to potential fire hazards.

2 *Compressor*

The OGP generators utilise a non-continuous process called pressure swing adsorption to produce oxygen. Hence, the inlet flow is variable. Make sure the compressor is not oversized by more than 30%. In the latter case, the risk of the compressor unloading is big, causing an instable inlet pressure. To compensate for this, a bigger and/or an additional air tank will be required.

Install the compressor away from carbon dioxide sources such as furnaces or burners to prevent carbon dioxide contamination of the adsorbent of the oxygen generator.

To produce oxygen at a constant purity, a constant inlet pressure is mandatory.

For these reasons it is highly recommended to use a variable speed drive compressor to supply compressed air for use in a PSA oxygen generator installation.

If a water separator (WSD) is not mounted in the compressor, a separate WSD needs to be added in the installation before the dryer.

2.1 Parallel installation

In a parallel installation, one or two compressors can be used:

- For redundant operation dual compressors are recommended

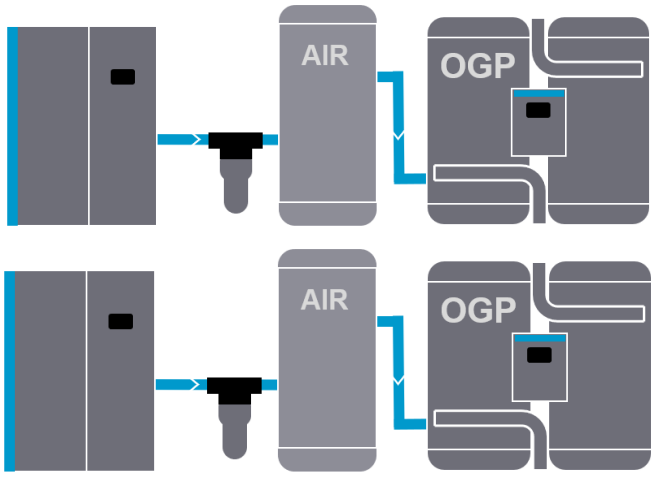

CONFIDENTIAL: This document is property of Atlas Copco Oil Free Air and shall not without our permission be altered, copied, used for manufacturing or communicated to any other person or company.

For double operation (two generators operate constantly at the same time), one single compressor can be used.

Note: in this case, the air tanks should be preceded by check valves

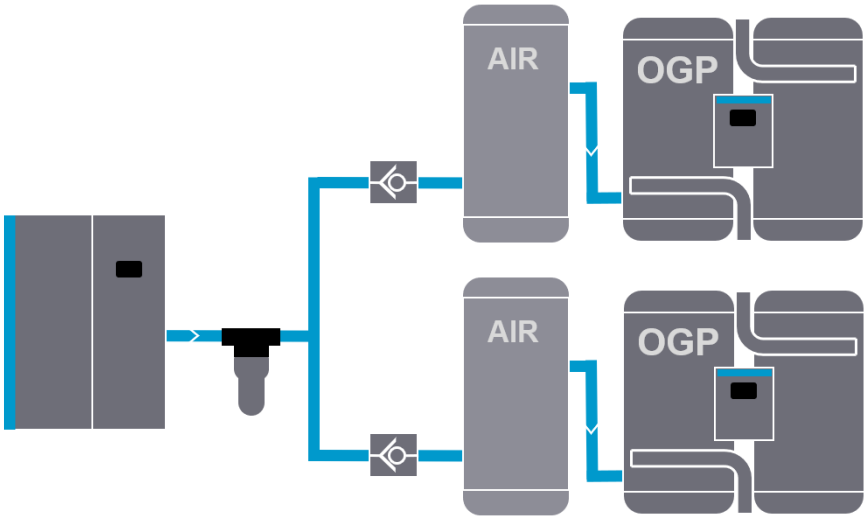

CONFIDENTIAL: This document is property of Atlas Copco Oil Free Air and shall not without our permission be altered, copied, used for manufacturing or communicated to any other person or company.

2.2 Connection to an existing air net

If the OGP is connected to a tank from an existing air net that has other consumers, this existing tank shall be followed by a check valve and a dedicated air tank for the OGP.
It is very important that the pressure in the existing air net is stable. If this cannot be guaranteed, it is required to install a pressure regulator upstream of the air tank.

Example of installation:

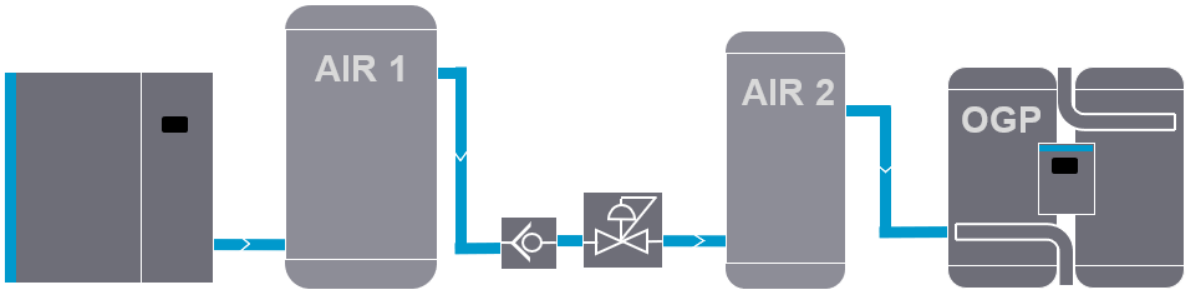

This pressure regulator should be set at the lowest working pressure of the existing tank (AIR 1) to maintain a constant inlet pressure for the OGP oxygen generator. See graph below as reference:

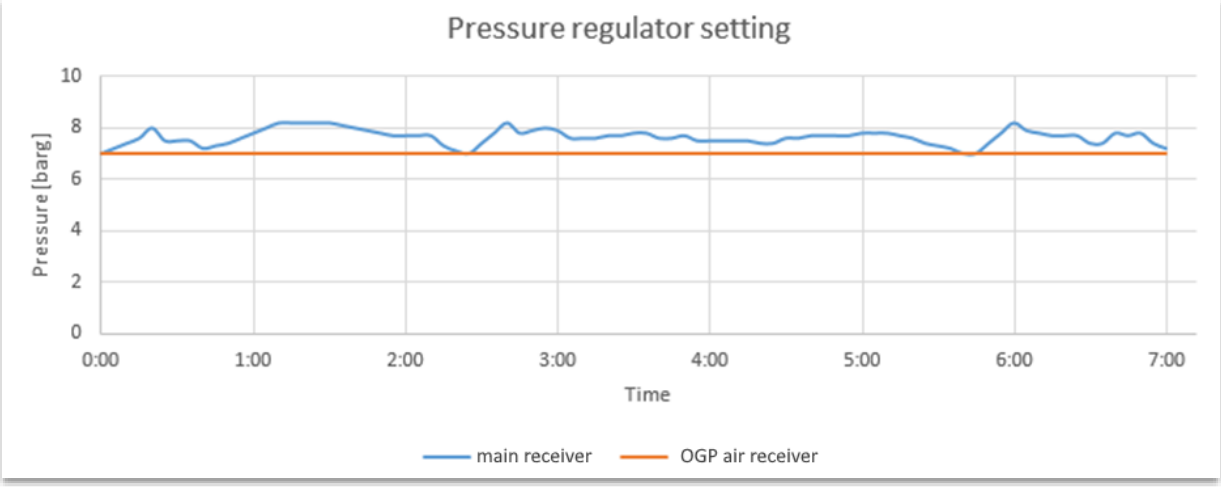

CONFIDENTIAL: This document is property of Atlas Copco Oil Free Air and shall not without our permission be altered, copied, used for manufacturing or communicated to any other person or company.

3 *Dryer*

The required inlet dewpoint is 3°C / 37°F PDP, unless the required PDP at the outlet is < -40°C PDP. To prevent condensation and destruction of the zeolite, a correct dryer needs to be sized. For OGP, there are three options depending on the ambient temperature and required outlet PDP:

- **Below 30°C / 85°F:** An integrated dryer may be used to provide a PDP of 3°C / 37°F.
- **Starting from 30°C / 85°F:** An oversized standalone refrigerant dryer is needed to provide the required inlet PDP of 3°C / 37°F.
- **If a PDP of < -40°C/ -40°F is required at the outlet:** A desiccant dryer with the same PDP as requested at the outlet is required.

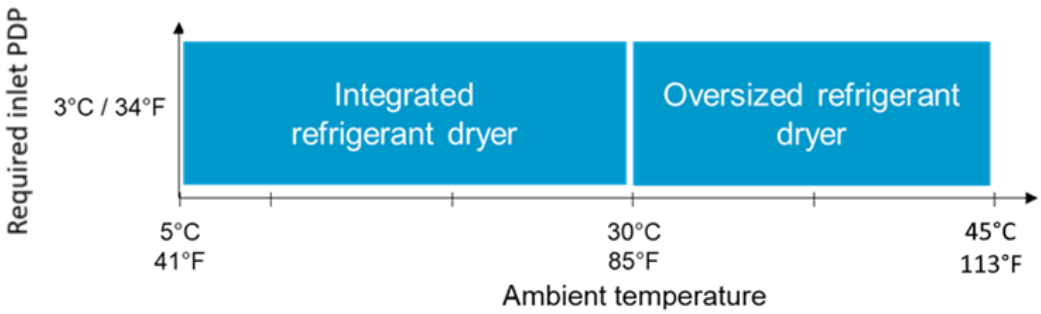

CONFIDENTIAL: This document is property of Atlas Copco Oil Free Air and shall not without our permission be altered, copied, used for manufacturing or communicated to any other person or company.

4 *Inlet filtration*

If carbon steel pipes are used between the compressor and the dryer, a dryer inlet filter is required. Consult the dryer installation proposal for more information.

The inlet filters should always be installed upstream of the compressed air tank

All coalescing filters (DD/PD+ or UD+) should be fitted with a drain tube. This drain should not end up in the wastewater. For draining of pure condensate water, an oil/water separator should be installed.

- UD+
  - The inlet filter type UD+ for ultra-high efficient filtration must be installed downstream the refrigerant dryer.
- QDT
  - If an oil injected compressor is used, a QDT carbon filter must be installed downstream the UD+ filter.
- PDp+
  - To filter dust from the QDT, a high-efficient dry dust PDp+ filter must be installed upstream the compressed air tank.

5 *Compressed air tank*

Consult the dimensioning table on the installation proposal to select the correct compressed air tank size or refer to the sizing tool. When a fixed speed compressor is used, one size bigger air tank should be used in most cases. Note that this sizing is incorporated in the oxygen generator selection tool.

5.1 Air tank safety valve

WARNING: The installation of a full flow safety valve on the air tank is obligatory. The full flow of an installation is the maximum flow that the compressor can deliver. The relief pressure has to be set at maximum 11 barg / 160psi.

CONFIDENTIAL: This document is property of Atlas Copco Oil Free Air and shall not without our permission be altered, copied, used for manufacturing or communicated to any other person or company.

6 *Oxygen generator*

Consult the oxygen generator selection tool to select the correct size of oxygen generator.

7 *Product & storage tank*

The product tank is used to ensure a stable outlet oxygen purity and a stable oxygen outlet pressure. Consult the dimensioning table on the installation proposal to select the correct product tank, or refer to the OGP sizing tool.

7.1 Product tank label

Place the supplied oxygen label 1622 5408 10 on the product tank. Make sure that this label is visually clear to the end user.

7.2 Product tank safety valve

WARNING: The installation of an oxygen approved safety valve on the product tank is obligatory. The safety valve needs to have a female threaded outlet connection, which needs to be guided outdoors where it has to be properly labelled as oxygen exhaust pipe. The relief pressure has to be set at maximum 11 barg / 160psi.

7.3 Storage tank

If a larger buffer capacity is required, follow one of the following recommendations:

- The maximum product tank size is one size bigger than the recommended size. Note that a larger product tank will have longer initial start-up and flushing times. For example:
  - OGP25 without extra buffer capacity:1500L tank
  - OGP25 with extra buffer capacity: 2000L tank
- If more buffer capacity is required, an additional storage tank of any size can be installed at the outlet, downstream of the flow restrictor. This way, the storage tank is always filled with the correct oxygen purity.
  - Note: the storage tank should be flushed with oxygen gas before commissioning.
  - When the generator is expected to experience large pressure fluctuations (larger than 2 bar), it is also advised to install an additional storage tank.

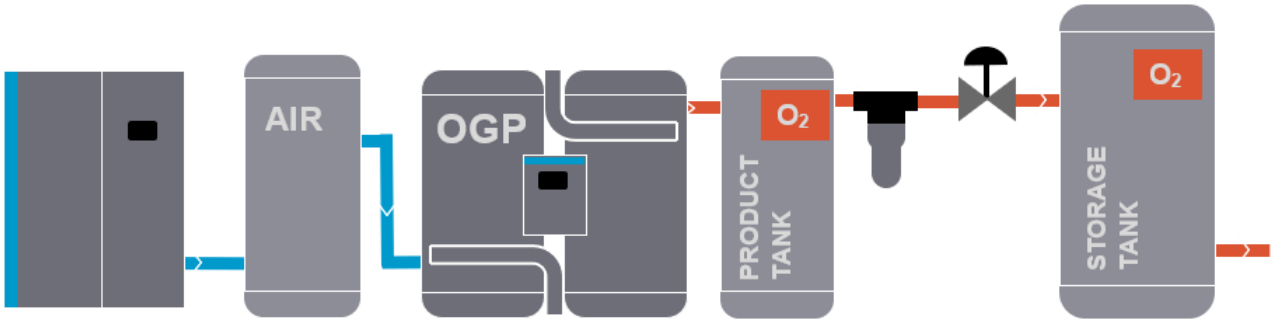

CONFIDENTIAL: This document is property of Atlas Copco Oil Free Air and shall not without our permission be altered, copied, used for manufacturing or communicated to any other person or company.

8 *Oxygen filtration*

An oxygen approved PDp+ filter “PDp+ O2” is required to prevent zeolite contamination of the outlet regulation equipment (optional) and also helps protecting the application. Depending on the application, the customer may install an oxygen approved sterile anti-bacterial filter after the oxygen generator.

WARNING: only use oxygen approved filters at the outlet of the oxygen generator.

9 *Outlet regulation and gas sample inlet*

As standard, an outlet pressure regulator PR2 and outlet flow regulator FR1 are supplied loose and are to be installed in the outlet piping.

Flow sensor FT1 and outlet flushing (oxygen check & restore) are optional.

All piping and connection diameters can be found on the installation proposal drawing.

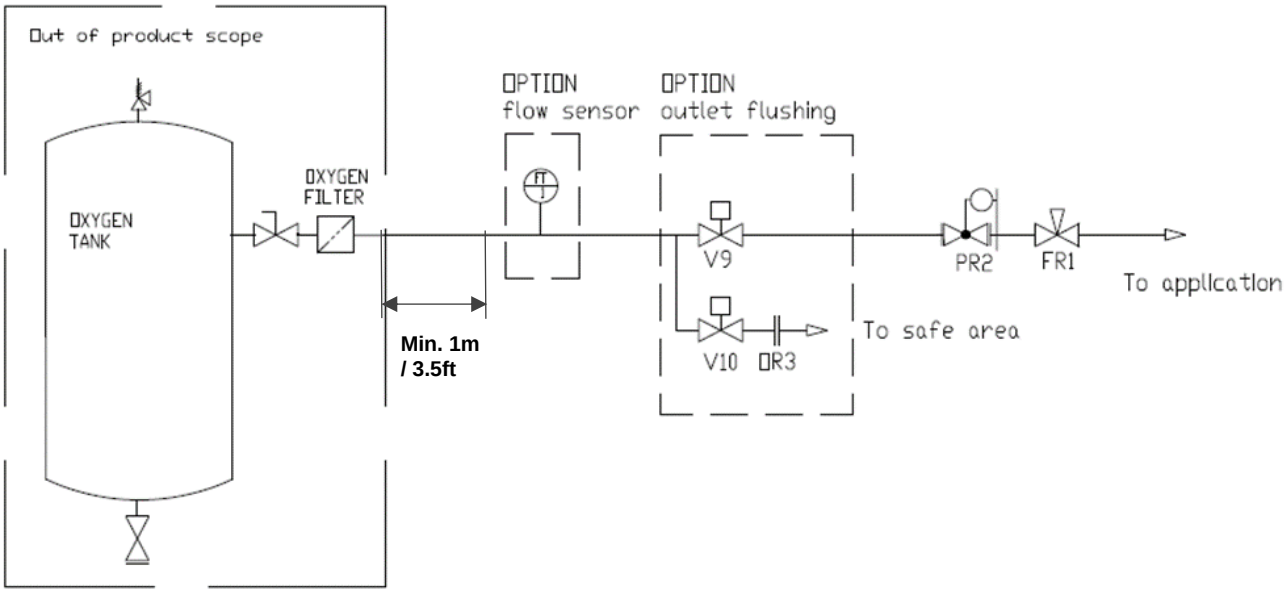

CONFIDENTIAL: This document is property of Atlas Copco Oil Free Air and shall not without our permission be altered, copied, used for manufacturing or communicated to any other person or company.

Install the FR1 flow regulator in the direction of the arrow indicated on the valve.

Example of OGP2-25 flow regulator:

Example of OGP35-225 flow regulator:

CONFIDENTIAL: This document is property of Atlas Copco Oil Free Air and shall not without our permission be altered, copied, used for manufacturing or communicated to any other person or company.

9.1 Sample gas connection

There are 2 gas sample inlet connections on this machine. The first one is referred to as "TP3" and always needs to be connected to the product tank, as through this connection the controller can detect the oxygen purity in the product tank. The second one is for troubleshooting with calibration gas only and does not need to be connected by default.

Connect the product tank to TP3 using the provided flexible 6mm tubing as indicated on the flow diagram.

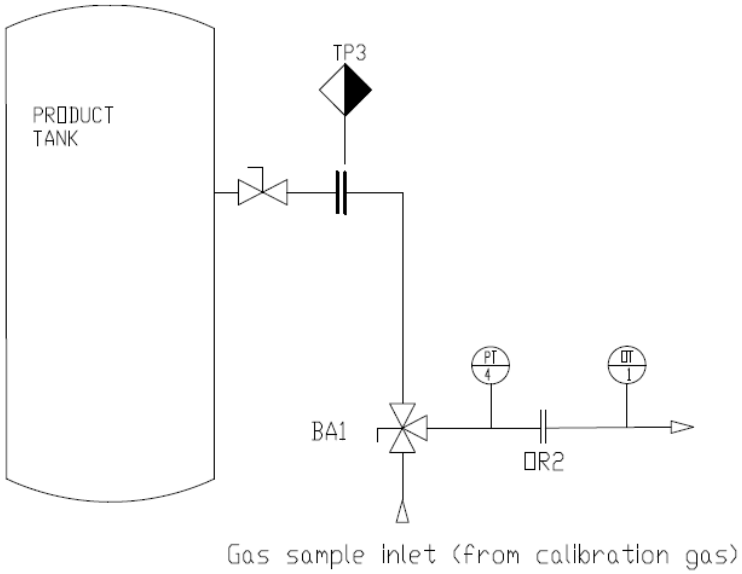

9.2 Flow sensor (optional)

In order to obtain a laminar flow profile, ensure a minimum straight pipe length of 1m / 3.5ft without bends or transitions before the flow sensor connection.

9.3 Outlet flushing (optional)

For safety reasons, it is obligatory to route the exhaust of the outlet flushing feature towards a safe area, preferably outdoors.

10 *Waste gas connection*

It is highly recommended to duct the exhaust of the generator to the outdoors. Doing so reduces the noise in the machine room and reduces the requirements of the ventilation system.

Use only rigid circular ducting to guide the exhaust gas outdoors.

The standard channel diameters are sized for a ducting length of 5m / 16ft. If this length is exceeded or many bends are required, the diameter of the channel needs to be oversized to limit the backpressure during exhaust. Prevent using short-radius bends.

WARNING:

The exhaust of the OGP oxygen generators contains only 10% of oxygen. Improper routing or ventilation can cause hypoxia.

The exhaust opening at the top must be free of any obstructions or restrictions during use.

The installed exhaust channels must remain completely open to prevent bursting of exhaust channels.

CONFIDENTIAL: This document is property of Atlas Copco Oil Free Air and shall not without our permission be altered, copied, used for manufacturing or communicated to any other person or company.

11 *Ventilation*

The ventilation requirements in the machine room depend on if the waste gas is routed outdoors or not.

- Natural ventilation can be sufficient for one air change per hour
    - Ventilation openings shall have an area > 1/100 of the room's floor area.
    - Ventilation openings should be placed diagonally opposite to each other.
    - Ventilation openings should not be obstructed.
- Forced ventilation is required for more than two air changes per hour:
    - Contact an authorized specialist for the sizing and installation of the ventilation system.
    - A safety warning in case the ventilation unit fails is required.

It is highly recommended to install the optional room oxygen monitor. This device will produce an audible and visual alarm when the oxygen content is lower than 19.5% or higher than 22.5%.

11.1 Waste gas is not routed outdoors

When the waste gas is not routed outdoors, thorough ventilation of the room is needed to prevent build-up of nitrogen causing hypoxia. The amount of ventilation depends on the installed generator and the size of the room, but should at least be 8 air changes per hour.

11.2 Waste gas is routed outdoors

When the waste gas is routed outdoors, good ventilation of the room is needed to prevent build-up of oxygen due to potential leaks in the installation. At least one air change per hour is required.

CONFIDENTIAL: This document is property of Atlas Copco Oil Free Air and shall not without our permission be altered, copied, used for manufacturing or communicated to any other person or company.